Electrolux PROFESSIONAL

Spin Dryers
Vegetable Washer & Spin Dryer, 2/6kg

ITEM #

MODEL #

NAME #

SIS #

AIA #

660072 (LVA100B) Vegetable Washer & Spin Dryer, 2/6 Kg - 230V/1/50

Short Form Specification

Item No.

Combi machine to wash and dry in a unique compact footprint. Constructed in 304 AISI stainless steel, it provides 3 automatic washing cycles with or without sanitation, manual draining and manual spinning. The washing effect is obtained by combining basket rotation and water turbulence generated by a two speeds pump. Equipped with a 500 ml frontal tank, to be filled with the sanitising product, automatically introduced via peristaltic pump during the washing. Flat and waterproof (IPX5) touch button control panel. Lid safety micro switch prevents operation when the lid is open during use. Self braking motor is stopping the basket rotation immediately. Very efficient and easy to clean filter system. Rounded corners of the well facilitate cleaning operations.
Supplied with 304 AISI stainless steel basket with small squared holes (5x5 mm).
Load per cycle: 2-3 kg (light vegetables); 6 kg (heavy vegetables). Washing speed: 60 rpm - Spin drying speed: 270 rpm.

APPROVAL:

Main Features

- Lid microswitch prevents the appliance from operating with the lid open.
- Electromagnetic device stops the machine in 2 seconds if lid is lifted during operation.
- Easy to clean, efficient filter system.
- Three automatic washing cycles (with or without sanitation), manual draining and manual spinning.
- Two turbulence levels (soft for light vegetables, and strong for heavy vegetables).
- Immersion wash or spray wash (tub filled at low level).
- Drain through solenoid valve.
- Peristaltic dispenser to add sanitizing during immersion wash.
- Supplied with:
  -AISI 304 stainless steel basket with small square roundish holes (5x5 mm).
- 500 ml tank placed in front of the machine to be filled with the sanitizing product.
- Self-braking motor to stop the basket rotation as soon as the cover is lifted (magnetic micro).
- Load per cycle: 2-3 kg (light vegetables); 6 kg (heavy vegetables).

Construction

- Bearing frame, external panelling, lid and extractable basket in 304 AISI stainless steel.
- Basket support in corrosion resistant aluminum.
- Spin rotation speed of 270 rpm.
- Two speeds pump for immersion wash and spray wash.

Included Accessories

- 1 of Basket with square holes (5x5 mm) for vegetable washer PNC 921014

Optional Accessories

- Basket with square holes (5x5 mm) for vegetable washer PNC 921014 ❑

Spin Dryers
Vegetable Washer & Spin Dryer, 2/6kg

Front

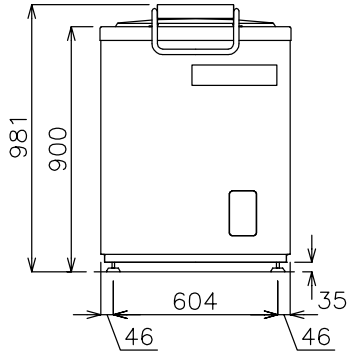

Side

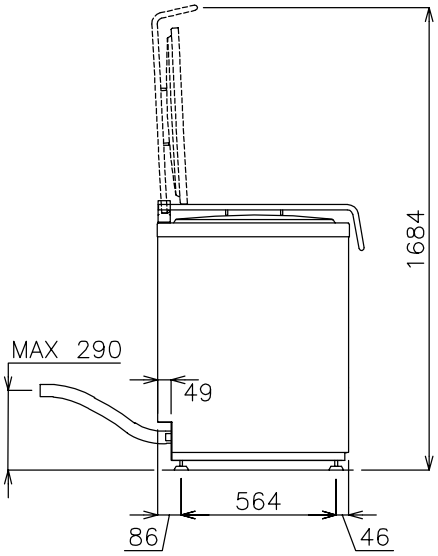

CWI1 = Cold Water inlet 1 (cleaning)
D = Drain
EI = Electrical inlet (power)

Top

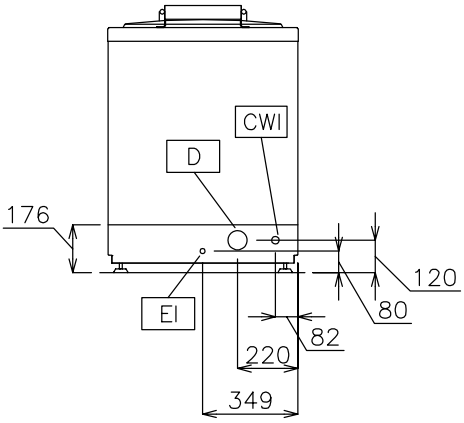

Electric

Supply voltage:	
660072 (LVA100B)	230 V/1N ph/50 Hz

Key Information:

Well Capacity:	30 lt
Usable well capacity:	30 lt
Load per cycle - light vegetables:	2-3 kg
Load per cycle - heavy vegetables:	6 kg
Spin drying rotation speed:	270 RPM
External dimensions, Width:	700 mm
External dimensions, Depth:	700 mm
External dimensions, Height:	1000 mm
Shipping weight:	117 kg

The company reserves the right to make modifications to the products without prior notice. All information correct at time of printing.